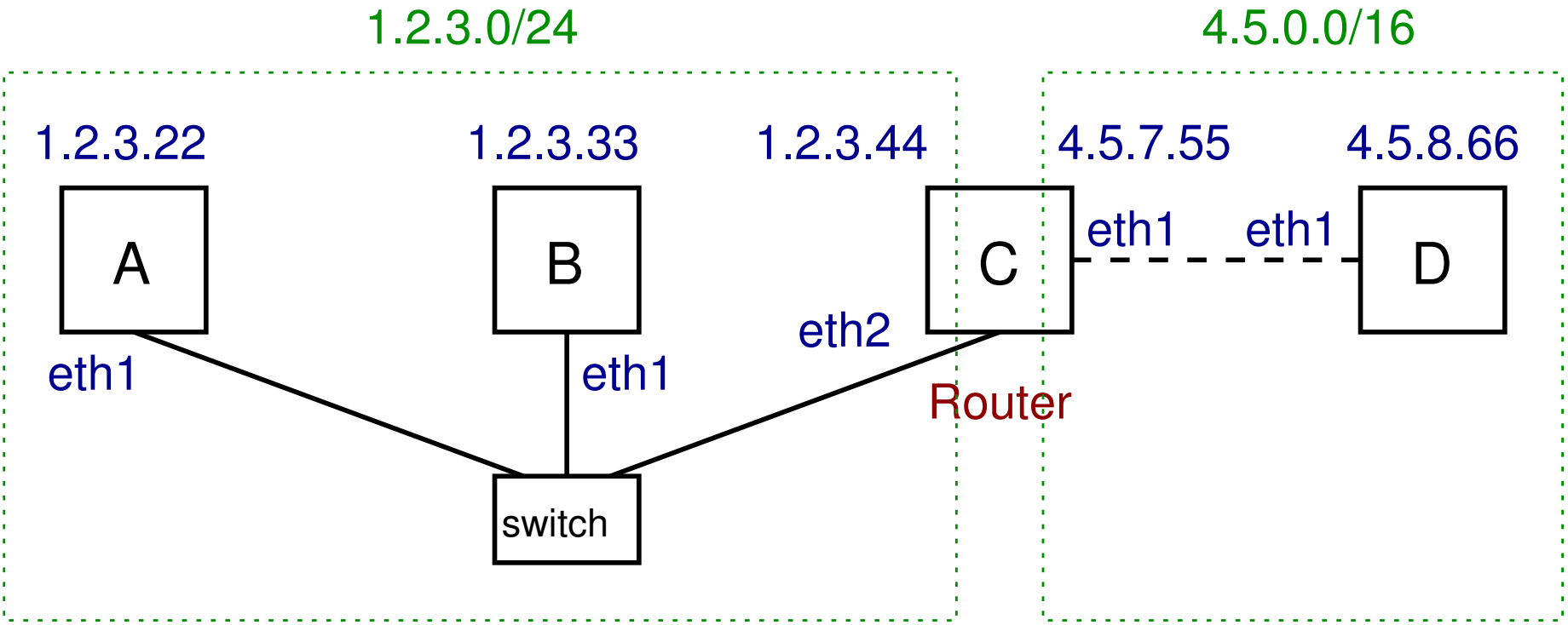

——— Straight–through Ethernet cable

- - - - - - Crossover Ethernet cable

Set IP addresses using ifconfig. E.g. on computer A:

```
sudo ifconfig eth1 1.2.3.22 netmask 255.255.255.0 up
```

Enable forwarding on computer C:

```
sudo sysctl net.ipv4.ip_forward=1
```

When setting the interface IP, a direct route to the local network is automatically added. Therefore, only need to add routes to other networks on the hosts. E.g. on computer D:

```
sudo route add -net 1.2.3.0 netmask 255.255.255.0
                                        gw 4.5.7.55 dev eth1
```

An alternative (and better) option is to add a default route:

```
sudo route add -net 0.0.0.0 netmask 0.0.0.0
                                        gw 4.5.7.55 dev eth1
```